No.01

Oki Data CONFIDENTIAL

C6150/C6050/C5950/C5850/C5750/C5650/ C6100/C5900/C5800/C5700/C5600/C5500/ C5550MFP Duplex Unit Maintenance Manual

[Rev. 1]

BOM		Use for		Certification Body	
Rev	Date	DCO No.	Contents	Design	Approval

Approval Naoki Sunaga	Design Naoki Sunaga	Name C6150/C6050/C5950/C5850/C5750/ C5650/C6100/C5900/C5800/C5700/C5600/ C5500/C5550MFP Duplex Unit Maintenance Manual	
Check			
Date 2007-07-20	**Oki Data Corporation**	Drawing No. 43830001TH	1/9

Document Revision History

Rev.No.	Date	Corrected items			Person in charge
		No.	Page	Description of change	
1	2007-07-20			ISSUE	MDP12 N.Sunaga

PREFACE

This manual describes the procedures for the maintenance of duplex unit installed in the C6150/ C6050/C5950/C5850/C5750/C5650 series of printers.

The document is produced for maintenance personnel use. For details on the procedures for handling the C6150/C6050/C5950/C5850/C5750/C5650 of printers, see its user documentation.

Note!
- The descriptions in this manual are subject to change without prior notice.
- In preparing the document, efforts have been made to ensure that the information in it is accurate. However, errors may be crept into the document. Oki Data assumes no responsibility for any damage resulting from, or claimed to be the results of, those repairs, adjustments or modifications to the printers which are made by users using the manual.
- The parts used for the printers are sensitive and, if handled improperly, may be damaged. It is strongly recommended that the products are maintained by maintenance men registered with Oki Data.

PARTS REPLACEMENT

This section describes the procedures for removing and reinstalling of assemblies and units in the field. The procedures provided here are for removal, and for reinstallation, perform procedures basically in reverse order from removing.

Precautions for Replacing Parts

(1) Before disassembling or reassembling duplex unit, turn off the printers in which they are installed and, from the printers, remove them.
(2) Do not disassemble duplex unit so long as they operate properly.
(3) Determine the ranges of disassembly according to the purposes of the operations for which the disassembly is done, so as not to do more disassembly than is necessary.
(4) Use designated maintenance tools.
(5) Follow disassembly steps in the orders specified; damage to parts may result.
(6) It is advisable to place and fix temporarily small parts that tend to get lost, such as screws and collars, to their original positions.

[Maintenance Tools]

Table 1 lists tools necessary to replace the printed circuit boards and the units.

Table 1 Maintenance Tools

No.	Service Tools		Q' ty	Place of use	Remarks
1	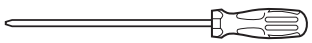	No. 2-200 Philips screwdriver, Magnetized	1	3~5 mm screws	
2		No. 3-100 screwdriver	1		
3	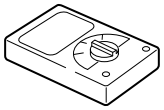	Digital multimeter	1		
4	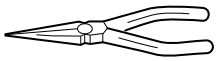	Pliers	1		

1. Parts Replacement

1.1 Duplex Unit

(1) Slide out the duplex unit ①.

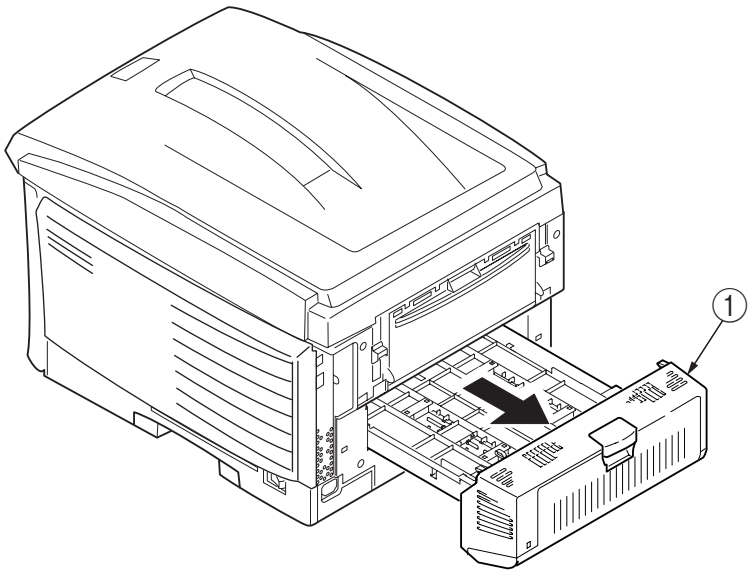

1.2 Upper Assy / Rear Assy

(1) Remove the duplex unit (see section 1.1).

(2) Warping the upper assy ①, detach it.

(3) Warping the rear assy ②, detach it.

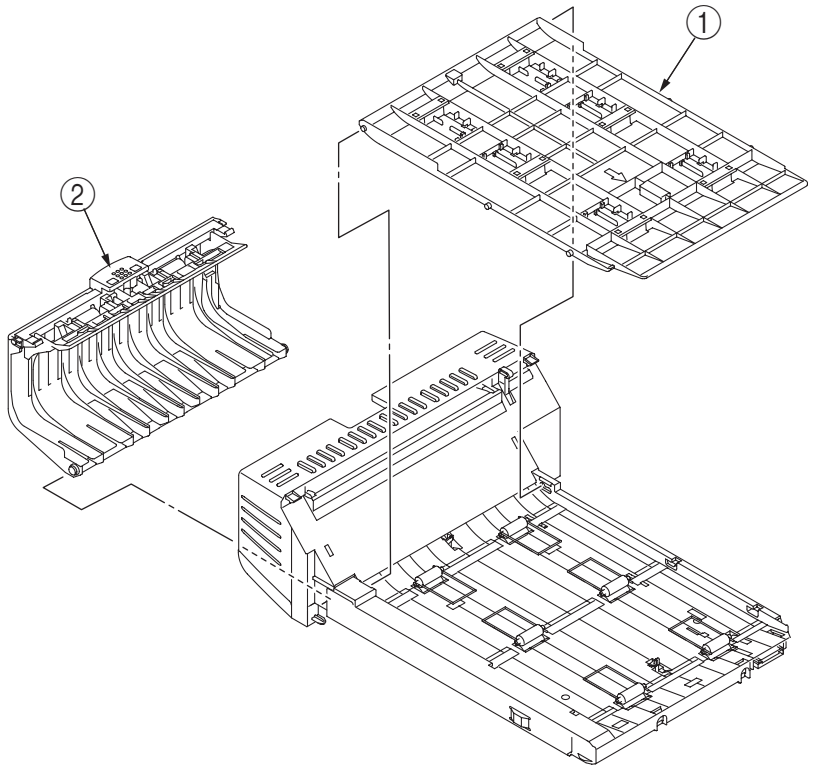

1.3 Duplex Transport Assy

(1) Turn over the duplex transport assy.

(2) Unscrew the three screws ① to remove the plate ②.

(3) Make connector removal, claw disengagement and screw ㉛ removal to remove the duplex PCB ③. The earth plate ㉜ becomes detached at the time of the removal of the duplex PCB ③.

(4) Disengage and remove the cover ④.

(5) Unscrew the screw ⑤ to remove the motor assy ⑥.

(6) Remove the gear ⑦ and the bushing ⑧ to remove the roller ⑨. Then the earth ⑩ and the bushing ⑪ become detached.

(7) Unscrew the three screws ⑫ and the three pulleys-idle ⑬ to remove the pulleys ⑭. The mini-pitch belts ⑮ become detached together with the pulley.

(8) Remove the holders ⑯ and the bushings ⑰ to remove the rollers ⑱. The earth spring becomes detached together with each roller.

(9) Remove the fan ⑲.

(10) Remove the spring ⑳ to remove the solenoid ㉑.

(11) Remove the stopper ㉝ and release claw engagement to remove the solenoid ㉒.

(12) Remove the lever ㉓. The lever ㉔ and the spring ㉕ become detached together with the lever ㉑.

(13) Remove the actuators ㉖, ㉗.

(14) Remove cable connection and then, by claw warping, detach the four transport sensors ㉘.

(15) Unscrew the two screws ㉙ to remove the two lock levers ㉚. Then the spring becomes detached.

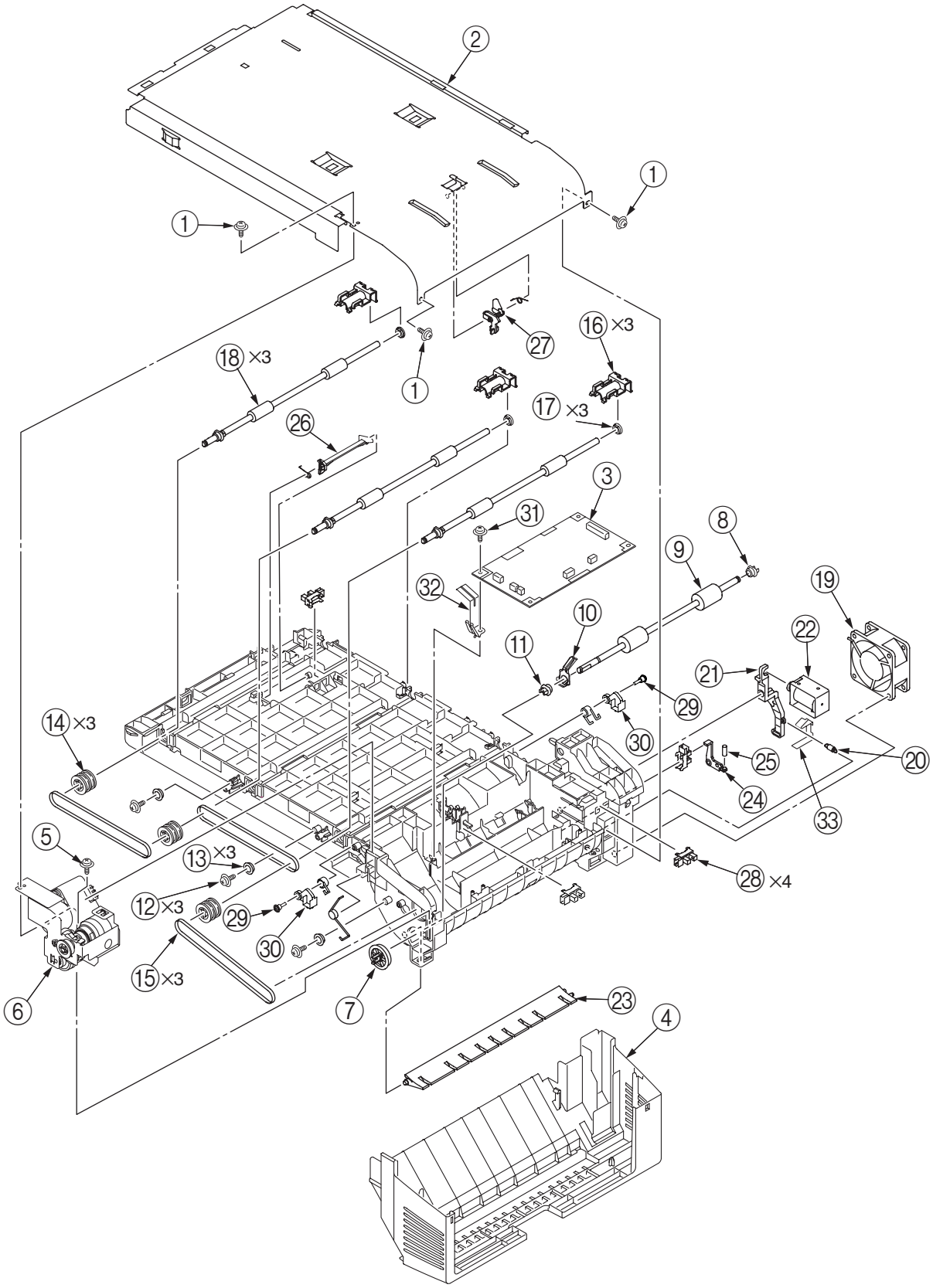
2
1
1
1
16 ×3
27
18 ×3
1
17 ×3
26
3
31
8
9
19
32
10
22
11
21
29
14 ×3
30
25
20
24
33
5
13 ×3
28 ×4
12 ×3
29
30
15 ×3
7
23
4
6

2 Principle of Operation

A. Paper Feeding

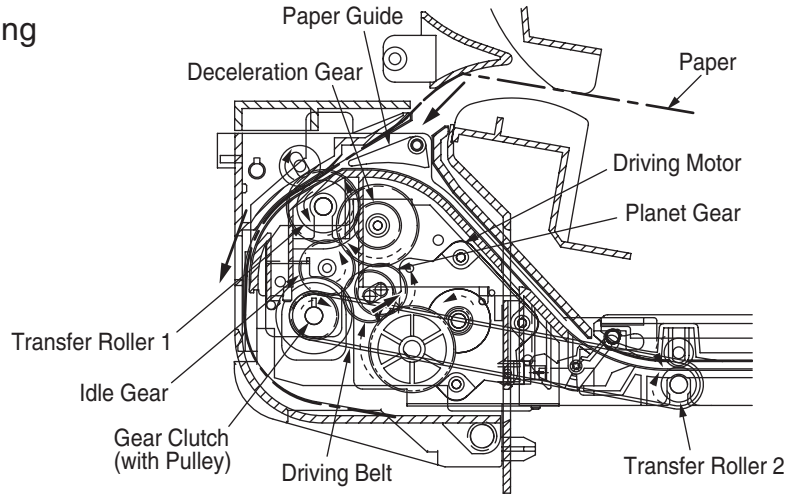

1. The solenoid turns on to establish with the paper guide the route of paper so as to feed the paper to the side of the duplex unit.
2. The driving motor runs in the direction of the arrow to move the planet gear to turn the transfer roller 1 in the direction of the arrow.
3. The paper that exited from the fuser unit is fed along the established route until the end of the paper is placed near the transfer roller 1.
4. Transmitting power from the planet gear to the deceleration gear, then to the idle gear, and then via the clutch and the driving belt turns the transfer roller 2 in the direction of the arrow.

B. Paper Reversing

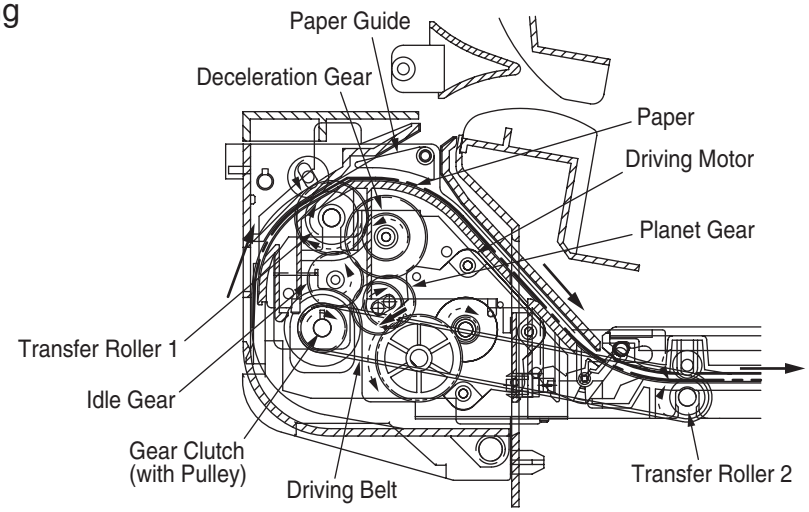

1. The solenoid turns off to establish with the paper guide the route of paper so as to turn upside down and move the paper inside the duplex unit.
2. Reversion of the driving motor in the direction of the arrow makes the planet gear move in the direction of the arrow to turn the transfer roller 1 in the direction of the arrow.
3. The end of the paper is the beginning of the paper after it is reversed. With the guide(s) and rib(s), the paper is sent toward the transfer roller 2.
4. Transmitting power from the planet gear directly to the idle gear, and then via the clutch and the driving belt turns the transfer roller 2 in the direction of the arrow.
5. After the paper reaches the transfer roller 2, the paper is directly guided until it reaches the registration roller placed at the front of printer equipment. The above figure does not show the paper route to the registration roller.